RevNo	Revision note	Date	Signature	Checked

ITEM	STOCK CODE	QTY	DESCRIPTION
1	(# TBD)	1	BBS-92 ALARM ONLY
2	(# TBD)	1	ALARM WARNING STICKER (NOT SHOWN)
3	(# TBD)	1	FITTING INSTRUCTIONS (NOT SHOWN)

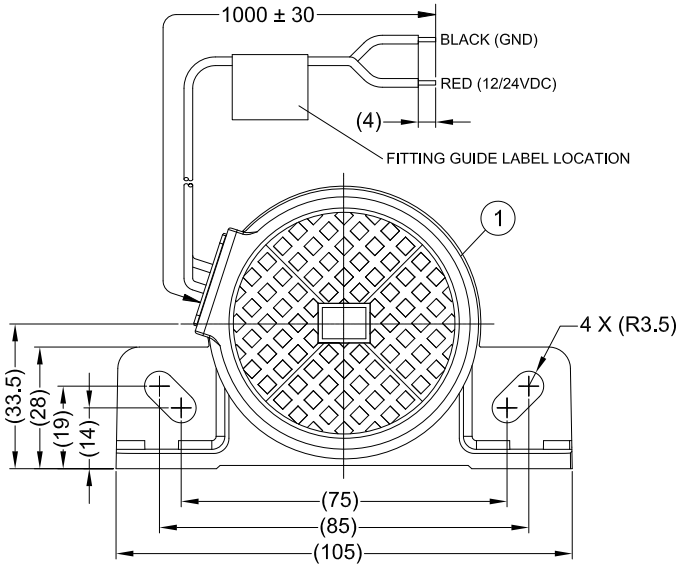

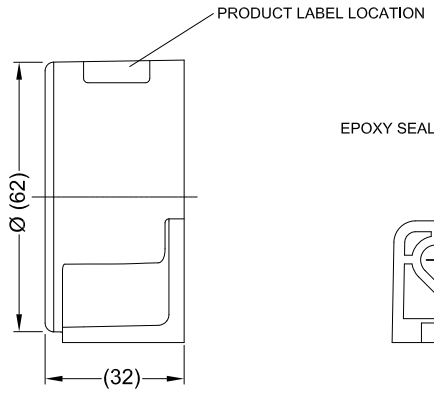

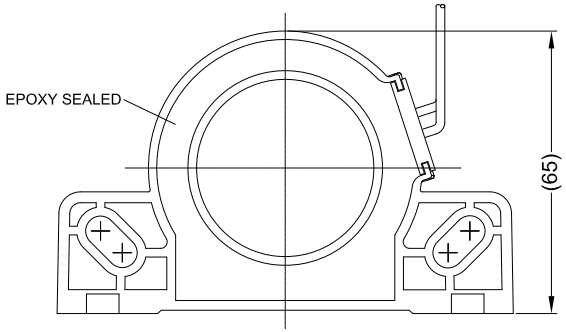

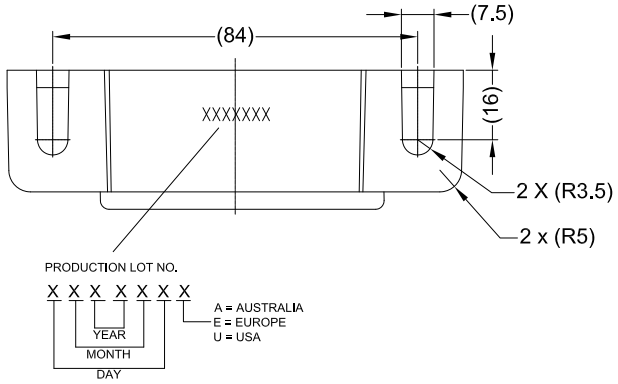

SPECIFICATION

RATED VOLTAGE: 12 AND 24 VOLTS DIRECT CURRENT (WORKING VOLTAGE RANGE 9 THRU 32 VOLTS)

RATED CURRENT: 0.2 AMPERES OR LESS

SOUND PRESSURE: 92±4 DECIBELS AT TEST VOLTAGE OF 14 AND 28 VOLTS

INTERMITTENCE: 80±10 CYCLES PER MINUTE AT TEST VOLTAGES 14 AND 28 VOLTS

TONE: WHITE SOUND(BBS)

ENVIRONMENTAL TEST: SUBJECT TO SAE J994

NOTES:
1. FINISH: MATT BLACK
2. MATERIAL: ABS PLASTIC
3. DIMENSIONS ARE FOR REFERENCE ONLY.

ASSEMBLY PLANT REF: BA590-92

PROPRIETARY NOTICE
THIS DESIGN AND TECHNICAL INFORMATION APPEARING ON THIS DRAWING IS THE PROPERTY OF BRIGADE ELECTRONICS PLC, AND IS DISCLOSED IN CONFIDENCE. IT IS NOT TO BE COPIED, REPRODUCED, REVEALED TO OR APPROPIATE BY OTHERS, EITHER IN WHOLE OR IN PART WITHOUT THE EXPRESS WRITTEN CONSENT OF BRIGADE ELECTRONICS PLC.

Itemref	Quantity	Title/Name, designation, material, dimension etc		Article No./Reference	
Designed by M.BUTLER	Checked by J.NEWMAN	Approved by - date D.KERAI	Units MM	Date 20/10/2010	Scale N/A
BRIGADE ELECTRONICS		BBS-92 (#0934A)			
		BE-001310-00-10		Edition A	Sheet 1/1